TABLE OF CONTENTS

DESCRIPTION	PAGE NO
LIST OF ABBREVATIONS	2
1.0 RELATED DOCUMENTS	3
2.0 FUNCTIONAL DESCRIPTION	3
2.1 BRIEF DESCRIPTION OF SFA	3
FIG1: RFU BLOCK DIAGRAM	4
3.0 SPECIFICATIONS	5
3.1 ELECTRICAL SPECIFICATIONS	5
3.2 MECHANICAL SPECIFICATIONS	7
4.0 TEST PROCEDURE	8
4.1 PHYSICAL INSPECTION	8
4.2 TEST INSTRUMENTS AND ACCESSORIES	8
4.3 TEST SETUP	9
FIG2: RFU TEST SETUP	9
FIG3: TEST SET UP FOR SMALL SIGNAL GAIN AND VSWR MEASUREMENT	10
4.3.1 CONNECTION DETAILS	10
4.4 FUNCTIONAL TEST PROCEDURE	11
4.4.1 POWER CONSUMPTION MEASUREMENT	11
4.4.2 RF MEASUREMENT	11
4.4.2.1 GAIN MEASUREMENT	11
4.4.2.2 NOISE POWER MEASUREMENT	12
4.4.2.3 SNR MEASUREMENT	12
4.4.2.4 HARMONICS MEASUREMENT	12
4.4.2.5 CHANNEL TO CHANNEL ISOLATION MEASUREMENT	13
4.4.2.6 ANTENNA TO BITE PORT ISOLATION MEASUREMENT	13
4.4.3 VIDEO PORT MEASUREMENTS	13
4.4.3.1 TRANSFER RESPONSE MEASUREMENT	13
4.4.3.2 RISE TIME MEASUREMENT	13
5.0 ESS TESTS	14
6.0 COMPATIBILITY CHECK.	15
7.0 TEST REPORT	16
7.1 PHYSICAL INSPECTION REMARKS	16
7.2 FUNCTIONAL TEST REPORT	17
ANNEXURE- A: PRODUCTION QUALITY TESTING	22
ANNEXURE- B : APPROVED QUALITY PLAN	26

LIST OF ABBREVATIONS:

ATR	Acceptance Test Report
ATTEN	Attenuation
BPF	Band Pass Filter
COC	Certificate Of Conformance
CW	Continuous Wave
DLVA	Detector Logarithmic Video Amplifier
EQUI	EQualiser
FOD	Foreign Object Debris
MDI	Master Drawing Index
PP	Purchase Part
PSD	Power Spectral Density
SOLT	Short Open Load Through
SW	SWitch
VSWR	Voltage Standing Wave Ratio

1.0 RELATED DOCUMENTS:

PP Drawing number: 4556 111 101 38.

2.0 FUNCTIONAL DESCRIPTION:

Switch Filter Assembly (SFA) / Receiver Front-end Unit (RFU) operate in the frequency range of 1 - 18 GHz. It provides accurate amplitude information of the received RF pulses. The unit has got two input ports for RF IN and BIT. The unit has got an RF output port. The unit houses a 25 PIN D-type connector thru which power supply and control signals are fed to the unit and Log VID OUT is taken out.

The functional block diagram is shown in Fig.1 Front end RF pre-amplification is provided to achieve a high sensitivity of -65dBm for amplitude measurement. The objective of SFA is to provide accurate amplitude information on the received RF pulses. In addition, a RF output is available with a nominal RF gain 35 ± 3 dB for further processing.

2.1 BRIEF DESCRIPTION OF SFA

A20-MH166 is an RF unit in the frequency range of 1-18 GHz with a dynamic range of 0dBm to –65dBm. The RF Unit is a front-end receiver, which performs amplification and detection of RF signals received from the antenna and provides RF as well as video outputs to the Signal processor Unit (SPU) for further processing. The frequency band of 1-18 GHz is subdivided into 5 sub-bands for reception. The RF Unit receives signals in one of the five sub bands as per band control input from the Signal Processor. The received signal is amplified, passed through a switched filter bank and then processed by an Extended Range Detector and Log Video Amplifier (XDLVA) to obtain required dynamic range. It also gives an RF output at the IFM port for frequency measurement. The signal processor controls the RF sub-band path selection. Block diagram of the unit is given in Fig 1.

Main features of this unit are given below.

- A separate Band pass filter is included in the path for 1-2 GHz signal to suppress harmonic signal in this band, which can cause problems in integration.
- Band switching time is specified to be 300ns (Max).
- Log slope is 25mV/dB
- RF Unit protection logic contains a limiter at the input to limit the input power to +30dBm (CW).
- Output is DC coupled
- Sealed unit with hermetic connector

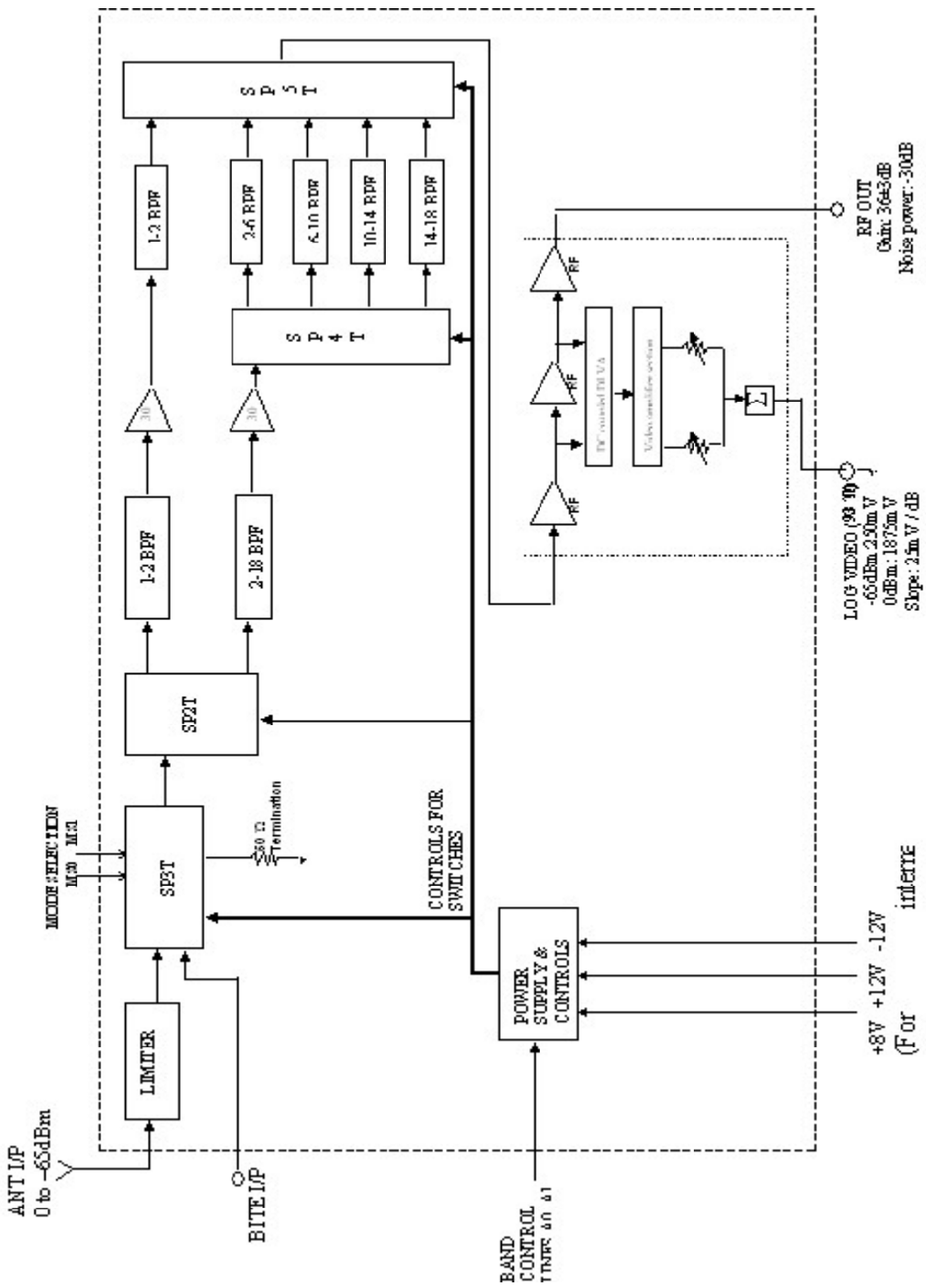

FIG 1: RFU BLOCK DIAGRAM

3.0 SPECIFICATIONS:

3.1 ELECTRICAL SPECIFICATIONS:

Sl. No.	PARAMETER	SPEC
1.1	Frequency range	1 to 18 GHz covered in 5 Bands: 1- 2 GHz,2-6 GHz,6-10 GHz,10-14 GHz, 14-18 GHz
1.2	**Log dynamic range**	
1.2.1	Nominal	-65dBm to 0dBm
1.2.2	Log range where accuracy is defined	-65dBm to 0dbm with ±3dB accuracy
1.2.3	Log reference voltage at -65dBm	250mV
1.3	Absolute accuracy of power measurement in the centre of sub bands and 25ºC ambient at the mounting surface, pass band around a straight line with co-ordinates 250mV @ -65dBm and 1875mV@0dBm with a slope of 25mV/dB	±2.0dB
1.3.1	At any frequency or temperature around the line with co-ordinates -65dBm @ 250mV 0dBm @ 1875mV	±3.0dB
1.4	Channel to channel Isolation for any frequency in the pass band, for an input such that the RF output is not compressed	65dB as seen on the Spectrum analyzer
1.5	Antenna port to BIT Port Isolation	65dB
1.6	**Absolute maximum Input level**	
1.6.1	For RF input Port	+30 dBm CW +50 dBm peak with 1µs PW @1000µs PRF
1.7	**Output RF port**	
1.7.1	Small signal gain within pass band	35dB ±3.0dB
1.7.2	Output SNR at -65dBm input	2.0 dB Min
1.7.3	Harmonics(In Band)	-8dBc at saturation -30dBc in linear range
1.7.4	Band Switching time Input TTL to 90% of selected Band	300ns Max
1.8	RF input pulse width	100 ns to 14 µs
1.9	**Video port**	Defined for an equivalent single ended output. RFU source impedance:93Ω Cable impedance:93Ω Load impedance:93Ω
1.9.1	Output DC offset	25mV ± 25 mV

Sl. No.	PARAMETER	SPEC
1.9.2	Output coupling	DC
1.10	**Video output (peak relative to ground)**	
1.10.1	At -65dBm At 0dBm When RFU is terminated into 93Ω±1Ω by 1meter (Max) long 93Ω cable	250 mV ± 75 mV 1875±75mV
1.10.2	Log slope	25 mV/dB
1.10.3	Log linearity at a given frequency and temperature at 25mV/dB	±1.5dB
1.11	**Pulse characteristics**	With properly terminated source impedance & load impedance for the line driver & line receiver
1.11.1	Rise time (10% to 90%)	25 ns Max
1.11.2	Settling time (10% to 0.5 dB below the final value)	40 ns Max
1.11.3	Recovery Time	75 ns Max
1.11.4	Falling Edge re-entrance for the pulse width 100ns to 100µs	The positive over shoot, excursion and ringing at the end of the falling end shall remain under threshold 110mV
1.12	Switching spikes	Should be less than 110mV
1.13	Delay between 50% TTL enable signal to 3dB(75mV) below peak of video shall be	Max 210 ± 20ns
1.14	Duty cycle variation for maintaining the peak of pulsed signal relative to ground within the accuracy specification of Para 1.3	100%
1.15	DC power +12V @ 540mA -12V @ 330mA +8V @ 830mA	17 Watts (Max)
1.16	**Connectors details**	
1.16.1	Antenna Port	SMA-F
1.16.2	BITE Port	SMA-F
1.16.3	Receive Disable (Internal) (Receiver input termination 50Ω)	Available
1.16.4	RF output Port	SMA-F
1.16.5	DC power & Signal connector	25 Pin D-Sub(M) Hermetic Seal Corp P/N SR50511-3-25P-NK21

SI NO.	PARAMETER	SPEC			
1.16.6	Connector Pin details	**Pin No.**	**Description**	**Pin No.**	**Description**
		1	+12V DC	14	A1
		2	-12V DC	15	A0
		3	NC	16	A2
		4	/A0	17	NC
		5	/A1	18	+8V RTN
		6	/A2	19	NC
		7	/MS0 (RF EN/DIS)	20	NC
		8	NC	21	MS1(ANT/BITE)
		9	+8V	22	/MS1(ANT/BITE)
		10	NC	23	VID OUT
		11	+12V RTN	24	VID RTN
		12	-12V RTN	25	MS0(RF EN/DIS)
		13	NC		
1.17	Band selection control logic	**A2**	**A1**	**A0**	**Selected Band**
		0	0	1	1-2GHz
		0	1	0	2-6GHz
		0	1	1	6-10GHz (Default)
		1	0	0	10-14GHz
		1	0	1	14-18GHz
1.18	Antenna, BITE & Receiver Disable control	**MS0**	**MS1**	**Mode**	
		0	0	BIT mode RF	
		0	1	ANT mode RF(Default)	
		1	0	Receiver Termination to 50Ω	
		1	1	Unused	

3.2 MECHANICAL SPECIFICATIONS:

SIZE : 199.39mm X 88.77mm X 31.24mm

WEIGHT: 1.4 Kg max

4.0 TEST PROCEDURE:

4.1 PHYSICAL INSPECTION:

Verify requirements as per the below list and enter the results in Test report 7.1 on the offered unit. Physical inspection of the unit to be done as per BEL drawing no: 4556 111 101 38 PP as per latest configuration control document when required.

1. Details of RFU R118 viz. Sl No, Year code and BEL P/N.
2. QM/EW&A accepted report of the Unit.
3. OEM ATR for RFU R118.
4. Verify for FOD – solder splash, Paint or lose items etc.
5. Verify overall dimensions of RFU R118 as per PP drawing.
6. Verify dimensions and centre distance(CD) of the mounting holes of RFU R118 with Fixture no: 8137 195 300 95
7. Verify weight of RFU R118.
8. Verify COC of the OEM.

4.2 TEST INSTRUMENTS AND ACCESSORIES:

1. Multi output Power supply (+12V, -12V, +8V) -1 no.

+12V	1A
-12V	0.5A
+8V	1A

2. Oscilloscope 500 MHz, Tektronix TDS 3052B or equivalent -1 no.
3. Signal generator, Agilent E8257D or equivalent -1 no.
4. Power meter, Agilent E4416A or equivalent -1 no.
5. Spectrum Analyzer, Agilent E4407B or equivalent -1 no.
6. Low Loss RF Cable -2 no.
7. Vector Network Analyzer, Agilent E8362B or equivalent -1 no.
8. Digital Multimeter, Agilent 34401A or equivalent -1 no
9. 50 Ω Terminator, OR equivalent -1 no.
10. Cable, Video (93 Ohms) -1 meter.
11. Test Jig No: R-RF001/002/003 (Requires +5V external supply) -1 no.

4.3 TEST SETUP

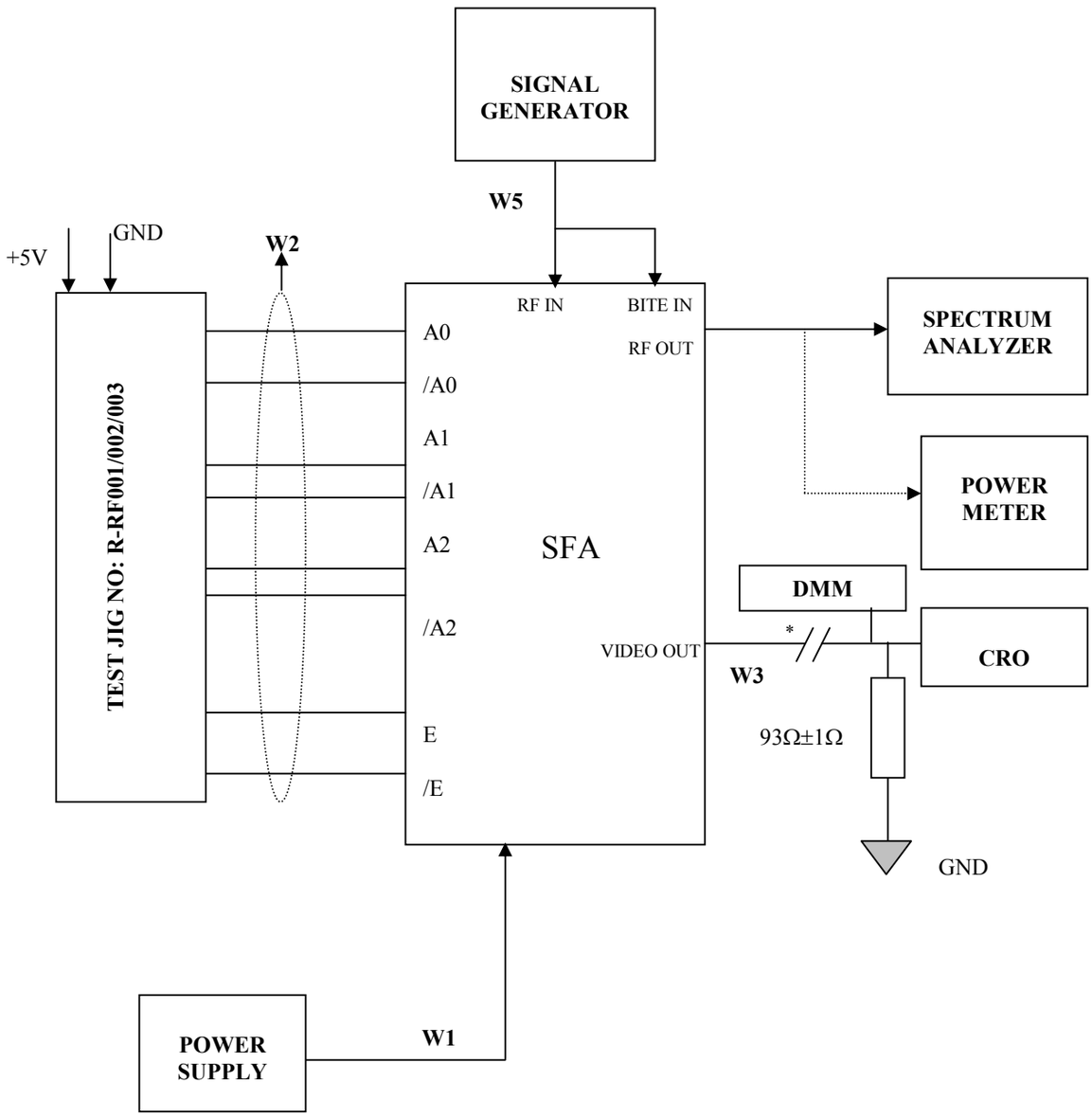

*** 1 Meter Video Cable**

Fig 2: RFU Test Set Up.

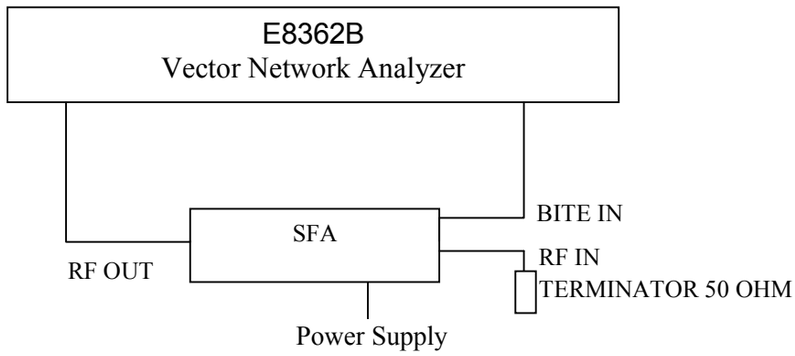

Fig 3: Test set-up for Gain Measurement

4.3.1 CONNECTION DETAILS:

LOOM	SIGNAL NAME POWER SUPPLY	SFA CONNECTOR - J2 PIN NO.	Type of Wire
W1	+12V	1	7/0.2 WIRE
	-12V	2	
	+8V	9	
	GND	11,12	

LOOM	CONTROL SIGNALS	SFA CONNECTOR - J2 PIN NO.	Type of Wire
W2	A0	15	7/0.2 WIRE
	A1	14	
	A2	16	
	/A0	4	
	/A1	5	
	/A2	6	
	/MS0	7	
	MS0	25	
	MS1	21 (ANT/BITE)	
	/MS1	22 (ANT/BITE)	

LOOM	Signal Name	SFA CONNECTOR- J2 PIN NO	Video Cable P/N
W3	VID OUT	23	93 Ohms cable
	VID RTN	24	93 Ohms cable

LOOM	Signal Name	SFA CONNECTOR	Type of Wire
W4	RF OUT	J5	Low loss RF cable
W5	RF IN	J4	Low loss RF cable
W6	BITE IN	J3	Low loss RF cable

4.4 FUNCTIONAL TEST PROCEDURE:

Note: Terminate all unused ports with 50 Ohms terminator.

4.4.1 POWER CONSUMPTION MEASUREMENT:

SUPPLY VOLTAGE	MAXIMUM CURRENT LIMIT
+ 12 V	540 mA
- 12 V	330 mA
+8 V	830 mA

1. Make the inter connections as per the set-up shown in Fig 2.
2. Switch on the Power supply.
3. Check all the Voltages.
4. Measure the current in the +12 V, -12 V & +8 V points at quiescent conditions of SFA. Record the results in the test report Sl.No 1.
5. The measured values should be as per the specification below.

4.4.2 RF MEASUREMENTS:

4.4.2.1 GAIN MEASUREMENT:

- **PASS BAND FREQUENCIES**

Spec: RF Gain: 35dB±3dB

1. Make the interconnections as per the set-up shown in the Fig 3.
2. Calibrate the Network Analyser System for Transmission measurement using **"thru"** calibration.
3. Attenuators may be used to get proper RF I/P to the SFA. Appropriate correction factors to be applied for the same.
4. Select Antenna port and Band 1 as per Table 1 & 2.
5. Feed RF I/P of -40dBm to RF I/P port of SFA in CW mode.
6. Make the Sweep measurements from 1GHz to 18GHz by selecting different bands

Band 1 : 1 to 2 GHz
Band 2 : 2 to 6 GHz
Band 3 : 6 to 10 GHz
Band 4 : 10 to 14 GHz.
Band 5 : 14 to 18GHz.

7. When the swept measurements are completed plot/print the band response.
8. Repeat the measurement for Band 2 to Band 5.
9. Record the test results in the test report Sl.No 2
10. The measured values should be within the specification.

Note:

- **Make the interconnections as per set up shown in Fig: 2 for the following measurements from 6.2.2 to 6.2.7.**
- **Switch on the power supply.**
- **Measure the losses of RF cable connected between Signal Generator and I/P port of SFA at 1GHz, 1.5GHz, 2GHz, 4GHz, 6GHz, 8GHz, 10GHz, 12GHz, 14GHz, 16GHz & 18GHz.**
- **Apply this loss correction when feeding signal to SFA.**
- **Refer Table-1 &2 for selection of PORTS and Bands.**

4.4.2.2 NOISE POWER MEASUREMENT

Spec: **Output Broad Band Noise: -30dBm Max. In all Bands**

1. Terminate RF I/P and BITE ports with 50Ω.
2. Follow Table-1 for band selection and select Band-1.
3. Measure the O/P power level using Power Meter.
4. Record the results in Test Report.
5. Repeat above for Band-2, Band-3, Band-4 & Band-5 and record the measured values in the test report Sl.No 3.
6. The measured values should be within the specifications shown above.

4.4.2.3 SNR MEASUREMENT

Spec: Output SNR: 2dB Min in all Bands

1. Set the power level of input signal to -65 dBm & frequency to 1.5GHz.
2. Select antenna port and Band-1 as per Table-1 & Table-2.
3. Measure the power level of output signal (S) in dBm. Using Power Meter.
4. Switch off the input signal and measure the output power level. This gives the Noise level (N) in dBm.
5. The difference between S & N (S-N) gives SNR.
6. Repeat the same for 4GHz, 8GHz, 12GHz, 16GHz and record the measured values in the Test report Sl.No 4.
7. The measured values should be within the specifications shown above.

4.4.2.4 HARMONICS MEASUREMENT

Spec: Harmonics: Better than 8dBc.

1. Make the test set-up as shown in Fig 2, with Power Meter.
2. Select antenna port and Band-1 as per Table-1 & Table-2.
3. Set the frequency of input signal to 1.5 GHz and Power level to 0dBm.
4. Record the harmonics level in Test Report.
5. Repeat the above for other frequencies of 2GHz, 4GHz, 6GHz and 8GHz & record the measured values in the Test report Sl.No 5.
6. The measured values should be within the specifications shown above.

4.4.2.5 CHANNEL TO CHANNEL ISOLATION MEASUREMENT:

Spec: For any frequency in the pass bands the output measured in the stop band shall be > 65 dB.

1. Make the test set-up as shown in the Fig 2 with Spectrum Analyser.
2. Select antenna port and Band-1 as per Table-1 & Table-2.
3. Set the input signal power level to -35dBm and frequency to 1.5 GHz.
4. Set the centre frequency of Spectrum Analyser to 1.5GHz and measure the amplitude and make it as reference (0dBm) using marker.
5. Switch to other Bands individually by referring to Table-1 and record the measured values in the Test report Sl.No 6.
6. The measured values should be within the specifications.
7. Repeat the above for other frequencies 4GHz, 8GHz, 12GHz and 16GHz.
8. Repeat the above measurement by selecting Band-2, Band-3, Band-4 and Band-5

4.4.2.6 ANTENNA TO BITE PORT ISOLATION MEASUREMENT

Spec: Isolation > 65dB.

1. Make the interconnections as per test set-up shown in Fig 2.
2. Terminate the RF OUT Port with 50Ω and connect BITE port to Spectrum Analyser.
3. Follow Table-1 and select antenna port.
4. Feed the signal of 4GHz and 0dBm at RF input port of SFA.
5. Measure the output at BITE port.
6. Record the measure values in the Test Report Sl.No 7. Measured value should be within the specification.

4.4.3 VIDEO PORT MEASUREMENTS:

4.4.3.1 TRANSFER RESPONSE MEASUREMENT:

Spec:

V_{out} @ -65 dBm: 250 mV ± 75mV
V_{out}@ 0 dBm: 1875 mV ± 75mV.
Accuracy: 6dB P-P Max

1. Make the interconnections as per set up shown in Fig 2 and select CW mode.
2. Set the frequency of input RF signal using Signal Generator to 1GHz frequency.
3. Vary the input power from -65 dBm to 0dBm as per test report and measure the output using CRO.
4. Record the measured values in the Test Report Sl.No 8.
5. Calculate the accuracy and record the result in Test Report Sl.No 8.
   A = 250 mV + INT [(B+65) * 25], B = I/P Power in dBm.
   Accuracy = [Vout-A] / 25 dB, Where Vout is in mV
6. The measured values should be within the specifications.
7. Repeat the above for all pass band frequencies of 1.5GHz, 2GHz, 4GHz, 6GHz, 8GHz, 10GHz, 12GHz, 14GHz, 16GHz and 18GHz.
8. The measured P-P accuracy should be within the specifications when the I/P power varies from –65 dBm to 0 dBm.

4.4.3.2 RISE TIME MEASUREMENT

Spec: At band center: 1.5GHz, 4GHz, 8GHz, 12GHz, and 16GHz
Rise time $\leq$ 25 ns

1. Make the interconnections as per test set up shown in Fig 2.
2. Feed the pulse from signal Generator with following pulse parameters
   PW = 1µs, PRI = 10 µs, Frequency = 1.5 GHz
3. Set input power level to -45dBm & input RF signal to Band-1 by following the Table-1.
4. Observe the Video Out on the CRO and measure the Rise Time. [During rise time measurements take the Sys. Signal Rise Time for correction].
5. Repeat the above measurements for Band-2, Band-3, Band-4 and Band 5 at band centers and record the results in the Test report Sl.No 9.
6. The measured values shall be within the specifications

5.0 ESS TESTS: ESS test report supplied by the vendor will be verified by TS/EW.

SI NO.	PARAMETER	SPEC
4.1	Acceptance Test	All units shall undergo successful E.S.S test prior to acceptance test.
4.2		Visual examination and performance check of the unit
4.3	Stabilization Bake	Without applying any DC power, the unit would be at 125ºC for 168Hrs. No data is required during test.
4.4		Visual examination and performance check of the unit
4.5	Thermal Shock	As per MIL-STD-202, Method 107 a. Temperature:-54ºC and +125ºC b. Dwell time at each temperature: 30minutes c. Transfer time from one temperature to the other: 15sec Max. d. The above constitutes 1-cycle. Conduct the Performance check at the end of 10th and 20th cycles, total 20 cycles.
4.6	Random Vibration	As per MIL-STD-883, Method 2026, test condition E,16.4 grms from 50Hz to 2000Hz. Test for 10 minutes in the z-axis (perpendicular to the mounting axis) and 5 minutes in the other 2 axes. During vibration, the single point (12GHz and RF I/P=-50dBm) RF gain and transfer response would be mounted and recorded.
4.7		Conduct the performance check
4.8	Mechanical shock	As per MIL-STD-202F, Method 213B,100g,6ms,Half sine 5-shock cycles along y-1 axis
4.9		Conduct the performance check

SI NO.	PARAMETER	SPEC
4.10	Temperature Cycling	The unit shall be subjected to 24 temperature cycles. Each temperature cycle is described below and takes 3.5Hrs Cycle description 1st and 24th cycles: Temp / Time / DC Power -40ºC Cold soak / 30min / OFF -40ºC wake up & warm up / 5min / ON -40ºC operational test / 25min / ON Transition to +71ºC / 15min / ON Soak at +71ºC / 60mins / ON +71ºC operational test / 25min / ON Total dwell time at +71ºC / 2.5Hrs / ON Transition to -40ºC / 15min Max / OFF Cycle description 2nd through 23rd cycles: Temp / Time / DC power -40ºC cold soak / 30min / OFF Transition to +85ºC / 15min / ON dwell time at +85ºC / 2.5Hrs / ON Transition to -40ºC / 15min Max / OFF Conduct performance check at the end of the 6th, 12th, 18th and 23rd cycle. During the 1st and 24th cycle monitor the performance of the unit.
4.11	RF Burn-In:	With DC power ON, at 0dBm input, at +85ºC for 48Hrs minimum.
4.12		Conduct the performance check.

6.0 COMPATIBILITY CHECK

RFU shall be checked in R118 system integration stage by giving frequencies 1.5GHz, 4.5GHz, 7.5GHz, 12GHz & 15GHz at power level of -30 dBm. If there is valid symbol as per PFM, the RFU is considered as compatible with R118 system.

7.0 TEST REPORT:

Tests Conducted for the Contract No / Sale order (Ref No): _____

Drawing No: 455611110138 Serial No: Date:

7.1 PHYSICAL INSPECTION REMARKS:

Activity			Observation	Acceptance by BEL Rep	Acceptance by ORDAQA Rep
Initial physical inspection					
a) Check for over all dimensions (mm) (Tolerances as per PP drawing)	L	199.39			
	B	88.77			
	H	31.24			
b) Following dimension to be verified with Inspection Jig. Tool No.: 8137 195 300 95					
Reference Zone in drawing: 4556 111 101 38 PP	Dimensions in mm (Tolerance as per drawing 4556 111 101 38 PP)				
A2	82.93				
B1	98.55				
B2	88.14				
c) Following dimension to be verified with drawing 4556 111 101 38 PP					
Reference Zone in PP drawing	Dimensions in mm (Tolerance as per drawing)				
B1	3.3				
B3	23.62				
B3	7.19				
B3	9.87				
d) Check marking details as per drawing 4556 111 101 38 PP					
e) Visual inspection					
1.SMA female connector:		3 Nos			
2. D-type connector - 25 pin (As per MIL-C-24308):		1No			
3.Screen Print Texts (As per drawing 4556 111 101 38)					
f) Following to be verified with respect to CoC.					
1. Paint 37038 texture Black per MIL-C-85285					

Activity	Observation	Acceptance by BEL Rep	Acceptance by ORDAQA Rep
2. Mounting surface: Electro less Nickel Per MIL-C-26074E,Class 3,Grade B			
3.Date code and Sl No.			
g) FOD check			
h) Weight (1.4Kg Max)			

7.2 FUNCTIONAL TEST REPORT:

Tests Conducted for the Contract No / Sale order (Ref No):_____

Drawing No.: 4556 111 101 38 Sl. No: Date:

7.2.1 TEST INSTRUMENTS USED:

Sl. No.	Instrument description	Model No.	Sl. No	Calibration status
1				
2				
3				
4				
5				
6				
7				
8				

7.2.2 TEST REPORT FOR LAB TEST:

Sl. No.	TEST	Test Parameter	Specified Value Of Current.	Measured Value (mA)	Test Result (PASS/FAIL)	Remarks
1.	**4.4.1 Power Consumption Measurement**	**Current for following Voltages**				
		+12V	540mA Max.			
		-12V	330mA Max.			
		+8V	830mA Max			

Sl.No	TEST	Test Parameter	Specified Value	Test Result (PASS/ FAIL) Antenna Port	BITE Port	Remarks
2	4.4.2.1 RF Gain Measurement	RF Gain @ -40 dBm Band-1	35dB ±3dB			Refer gain plots
		Band-2				
		Band-3				
		Band-4				
		Band-5				

Note: Gain plot to be attached

Sl.No	TEST	Test Parameter	Specified Value	Measured Value (dBm)	Test Result (PASS/FAIL)	Remarks
3.	4.4.2.2 Noise Power Measurement	**Broad Band Noise** Band 1 Band 2 Band 3 Band 4 Band 5	-30dBm Max			
4.	4.4.2.3 SNR Measurement	**SNR @ -65dBm I/P** 1.5GHz 4 GHz 8 GHz 12 GHz 16 GHz	≥ 2dB			

Sl. No	TEST	Test Parameter	Specified Value	Measured Value (dBm)	Test Result (PASS/FAIL)	Remarks
5.	4.4.2.4 Harmonics Measurement	**Harmonics @ 0dBm I/P** BAND 1 1.5 GHz BAND 2 2 GHz 4 GHz BAND 3 6 GHz 8 GHz	Better than 8dBc			
		BAND 4 BAND 5	NA			

6. **CHANNEL TO CHANNEL ISOLATION (Para 4.4.2.5)** Input @ -35dBm
Specified Value: > 65dB

Frequency (GHz)	1.5	4	8	12	16	Test Result Pass/Fail	Remarks
Band	**Band 1**	**Band 2**	**Band 3**	**Band 4**	**Band 5**		
Band 1							
Band 2							
Band 3							
Band 4							

Sl.No	TEST	Test Parameter	Specified Value (dB)	Measured Value (dB)	Test Result (PASS/FAIL)	Remarks
7.	4.4.2.6 Antenna to BITE port Isolation Measurement	Isolation @ 0dBm	> 65dB			

8a) TRANSFER RESPONSE (para 4.4.3.1)

Spec:

V_{out} @ -65 dBm: 250 mV ± 75mV
V_{out}@ 0 dBm: 1875 mV ± 75mV.
Accuracy: 6dB P-P Max

Input Power (dBm) / Freq. GHz	1GHz		1.5GHz		2GHz		4GHz		6GHz		8GHz		Test Result (Pass/ Fail)	Remarks
	Vout mV	Acc dB	Vout mV	Acc dB	Vout mV	Acc dB	Vout mV	Acc dB	Vout mV	Acc dB	Vout mV	Acc dB		
-65														
-50														
-40														
-30														
-20														
-10														
0														

8b) TRANSFER RESPONSE (para 4.4.3.1)

Spec:

V_{out} @ -65 dBm: 250 mV ± 75mV
V_{out}@ 0 dBm: 1875 mV ± 75mV
Accuracy: 6dB P-P Max

Input Power (dBm) / Freq. GHz	10GHz		12GHz		14GHz		16GHz		18GHz		Test Result (Pass/ Fail)	Remarks
	Vout mV	Acc dB	Vout mV	Acc dB	Vout mV	Acc dB	Vout mV	Acc dB	Vout mV	Acc dB		
-65												
-50												
-40												
-30												
-20												
-10												
0												

9. RISE TIME MEASUREMENT (Para 4.4.3.2)
Specified Value: ≤ 25nS Max.

	@ PW= 1μS,PRI=10μS	Test Result (Pass/ Fail)	Remarks
BAND	**RISE TIME (nS)** @ -45dBm I/P		
BAND1			
BAND 2			
BAND 3			
BAND 4			

BEL Rep
Date:

OAQA Rep
Date:

ANNEXURE - A

A. PRODUCTION QUALITY TESTING (PQT)

A1. Periodicity of PQT: PQT shall be conducted for RFU during the first quarter of the year, for 1 in every 40 units.

A2. Conditions for PQT: PQT shall also be conducted for the RFU under the following conditions,

a. Changes in Design/Hardware.
b. Change of Material.
c. Change of Manufacturer.
d. Change in Place of manufacture.

A3. Screening for PQT: PQT to be conducted only for ATP and ESS qualified units.

A4. Environmental Tests:

The following environmental tests will be carried out on SFA.

1. Random Vibration Test
2. Low Temperature Storage & Operational Test
3. High Temperature Storage & Operational Test
4. Humidity Test
5. Altitude test

Prior-to & after each environmental test all ATP tests, mentioned in this document, are to be carried out.

Note:
After completion of Low & High temperature storage tests, the unit shall be brought to ambient temperature and allowed to stabilize for 2 Hrs before starting operational test.

A4.1 Random vibration: (Operational)

Random Vibration with power spectral density from 20 Hz to 50Hz rising to 0.2g²/Hz with 3dB/Octave,
50Hz to1000Hz with 0.2g²/Hz & -6dB/Octave roll off from 1000Hz to 2000Hz.
15 Minutes on all three axes. Refer Profile 1.

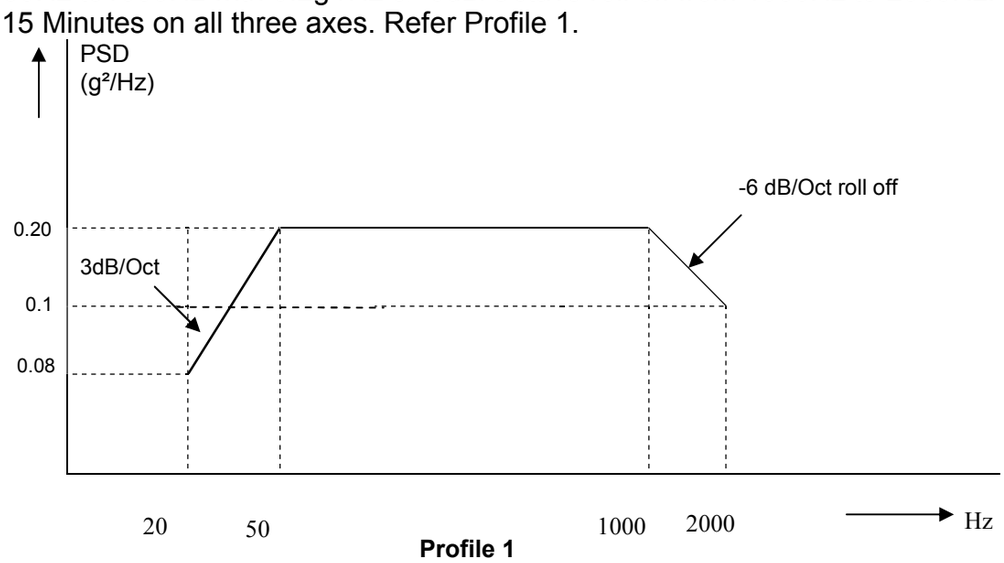

Profile 1

A4.1.1 OPERATIONAL TESTING

Transfer Response test as per table below is to be carried out.

Frequency (GHz) / Input Power(dBm)	Band 1		Band 2		Band 3		Band 4		Band 5		Spec: 1125 mV±75 mV	
	1.5		4		8		12		16		Test Result Pass/Fail	Remarks
	Vout (mV)	Acc (dB)	Vout (mV)	Acc (dB)	Vout (mV)	Acc (dB)	Vout (mV)	Acc (dB)	Vout (mV)	Acc (dB)		
-30dBm												

A 4.2 Low Temperature- Storage & Operation

A4.2.1 Storage

SFA unit shall be subjected to Low Temperature Storage Test in accordance With the following parameters and Profile.

Chamber Temperature : -54°C.
Duration : 4 Hrs.

A4.2.2 Operating

SFA shall be subjected to a Low Temperature Operational Test in accordance with the following parameters.

Chamber Temperature : -40 °C
Duration : 4 Hours Continuously ON

A4.2.2.1 OPERATIONAL TESTING

Transfer Response test as per Para A4.1.1 to be carried out.

A4.3 High Temperature - Storage & Operation

A4.3.1 Storage

SFA unit shall be subjected to High Temperature Storage Test in accordance with the following parameters and Profile.

Chamber Temperature : +120°C
Duration : 12 Hrs.

A4.3.2 Operation

SFA shall be subjected to a High Temperature Operational Test in accordance with the following parameters.

Chamber Temperature : +71 °C
Duration : 4 Hours Continuously ON

Note: The amount of time required to ramp the temperature is dependent on the test facility change rate. The volume of the chamber shall be at least 10 times the DUT.A ground has to be extended from DUT to test setup.

A4.3.2.1 OPERATIONAL TESTING

Transfer Response test as per Para A4.1.1 to be carried out.

A4.4 Humidity (Non Operational)

SFA shall be subjected to a Damp Heat (Humidity) Test consisting of 5 Cycles in accordance with the following parameters and Profile

Humidity : 85 to 95% R.H
Temperature : +30 to +60 ° C
Cycle Period : 24 Hrs.
No.of Cycles : 5

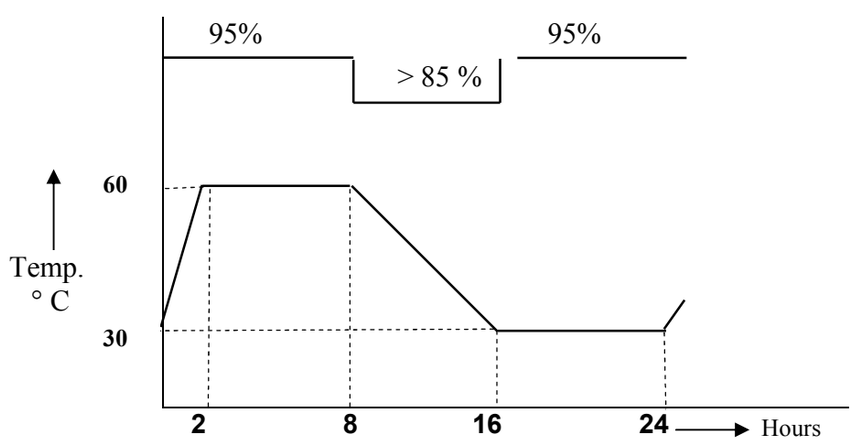

DURATION: 5 Cycles

Note:

1. The amount of time required to ramp the temperature is dependent on the test facility change rate.
2. At the end unit shall undergo Visual Inspection

A4.5 Altitude (Operational)

SFA shall be subjected to altitude test consisting of 1 Cycle in accordance with the following parameters as per MIL-STD-810F, Method 500.4

Altitude : 20Km
Duration : 1hour soak
Altitude change rate : 10 Meter/Sec (can be changed subject to chamber conditions)

A4.5.1 OPERATIONAL TESTING

Transfer Response test as per Para A4.1.1 to be carried out.

Table-1 (PQT)

Sl	Test	Compliance (Y/N)	Signature (BEL Rep)	Signature (AQA)	Remarks
1	Random Vibration Test				
2	Low temperature-Storage				
3	Low temperature-Operational				
4	High temperature-Storage				
5	High temperature-Operational				
6	Humidity (Non Operational)				
7	Altitude (Operational)				

ANNEXURE – B

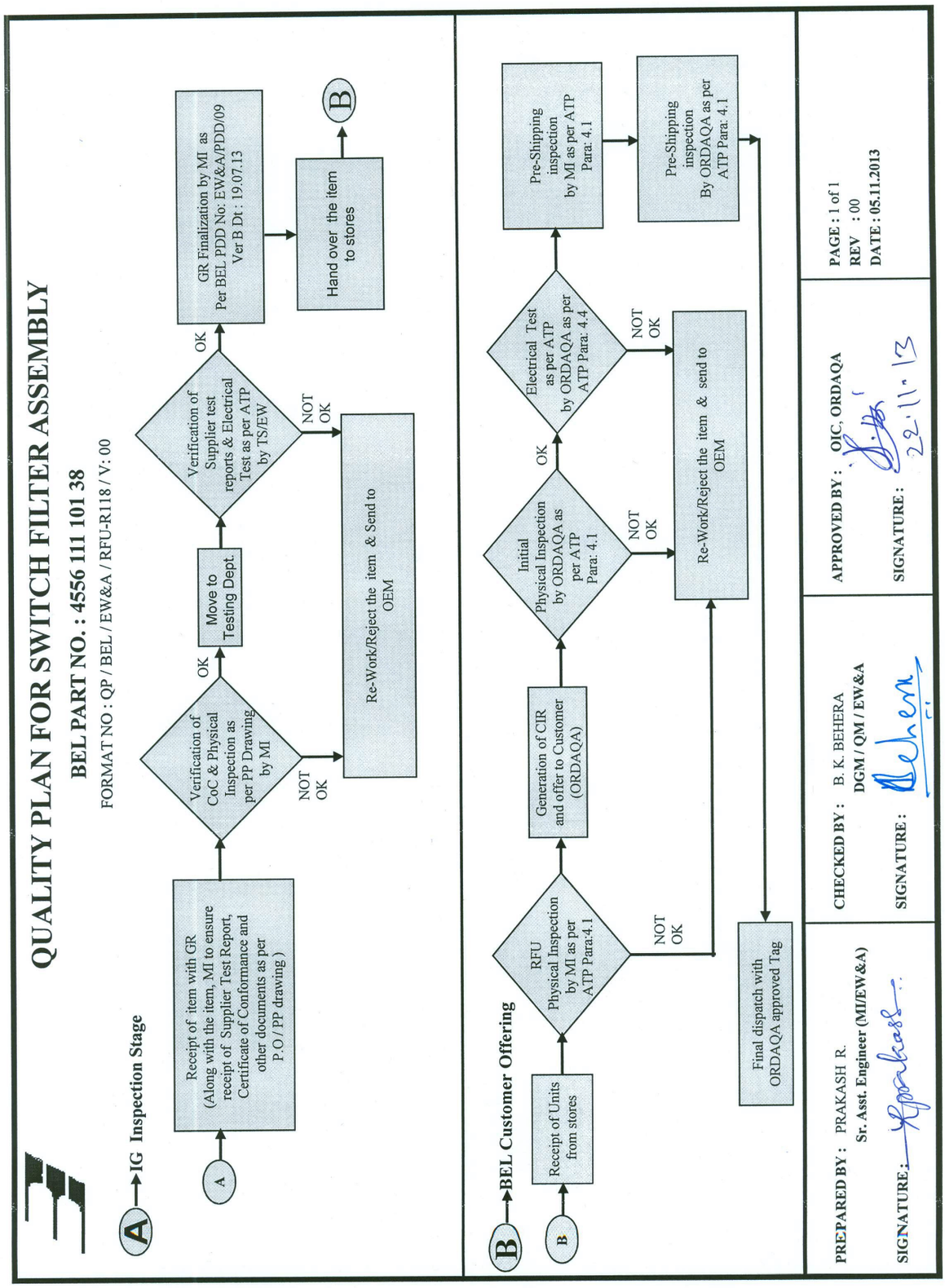
QUALITY PLAN FOR SWITCH FILTER ASSEMBLY
BEL PART NO. : 4556 111 101 38
FORMAT NO : QP / BEL / EW&A / RFU-R118 / V: 00
A
IG Inspection Stage
A
Receipt of item with GR (Along with the item, MI to ensure receipt of Supplier Test Report, Certificate of Conformance and other documents as per P.O / PP drawing)
Verification of CoC & Physical Inspection as per PP Drawing by MI
OK
NOT OK
Re-Work/Reject the item & Send to OEM
Move to Testing Dept.
Verification of Supplier test reports & Electrical Test as per ATP by TS/EW
OK
NOT OK
GR Finalization by MI as Per BEL PDD No: EW&A/PDD/09 Ver B Dt : 19.07.13
Hand over the item to stores
B
B
BEL Customer Offering
B
Receipt of Units from stores
RFU Physical Inspection by MI as per ATP Para:4.1
NOT OK
Generation of CIR and offer to Customer (ORDAQA)
Initial Physical Inspection by ORDAQA as per ATP Para: 4.1
OK
NOT OK
Re-Work/Reject the item & send to OEM
Electrical Test as per ATP by ORDAQA as per ATP Para: 4.4
OK
NOT OK
Pre-Shipping inspection by MI as per ATP Para: 4.1
Pre-Shipping inspection By ORDAQA as per ATP Para: 4.1
Final dispatch with ORDAQA approved Tag
PREPARED BY : PRAKASH R.
Sr. Asst. Engineer (MI/EW&A)
SIGNATURE :
CHECKED BY : B. K. BEHERA
DGM / QM / EW&A
SIGNATURE :
APPROVED BY : OIC, ORDAQA
SIGNATURE :
22.11.13
PAGE : 1 of 1
REV : 00
DATE : 05.11.2013